Technical data sheet

HW Cavity wall outlet box, airtight

Item number: 2003832

Airtight cavity wall outlet box for cavity walls, for the mounting of wall luminaires or loudspeakers. With cover.

• 1 entry for NYM cables 3 x 2.5 mm² or 5 x 1.5 mm²

• 1 entry for NYM cables 3 x 1.5 mm²
Tested according to DIN EN 60670-1, DIN EN 60670-22 and DIN 49073-1.

HALOGEN FREE | 850° | IP 30 | 1,5 mm² | 400 V

PP/ TPE Polypropylene / Thermoplastic elastomer

Master data

Item number	2003832
Type	HG 45-WA-LD
Description 1	HW Cavity wall outlet box
Description 2	airtight, with cover
Available from	01.10.2021
Manufacturer	OBO
Dimension	Ø38, H45
Colour	orange / grey
Material	Polypropylene / Thermoplastic elastomer
Smallest sales unit	25
Unit of quantity	Piece
Weight	0.99 kg
Weight unit	kg/100 pc.
CO2 Footprint (GWP) Cradle-to-Gate	0,0367 kg CO2e / 1 Piece

Technical data sheet

HW Cavity wall outlet box, airtight

Item number: 2003832

Dimensions

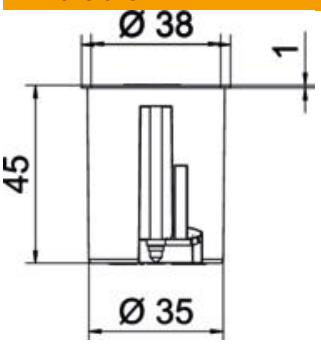

Length	38 mm
Height	45 mm

Technical data

No. of entries	2
Type of entry	NYM cables and pipes
Type of housing penetration	Insertion membrane
Version for	Single
Type	Wall outlet box
Device fixing	Screws ,
Cover	White
Cover fastening	Locking
Flame-resistant	Acc. to VDE 0471/IEC 60695-2-11, test temperature 850°C
Shape	Round
Milling hole diameter	35 mm
Suitable for plate thickness, max.	40 mm
Suitable for plate thickness, min.	5 mm
Halogen-free	yes
Cable entries 3 x 1.5 mm²	1
Cable entries 3 x 2.5 mm² / 5 x 1.5 mm²	1
With nail strap	no
With bolts	no
Nominal cross-section, max.	1.5 mm²
Nominal cross-section, min.	1.5 mm²
ROHS-conformant	yes
Impact-resistant	no
Protection rating	IP30
Airtight	yes
Rated voltage	400 V