Technical data sheet

45° bend 85 FS

Item number: 6036200

45° bend for the creation of a horizontal branch, fitting for lock and screw-on cable trays of side height 85 mm. Screwless mounting with double clamps or screw connection with FRS truss-head screws and M6 combination nuts. Can be used in indoor areas. Fastening material must be ordered separately.

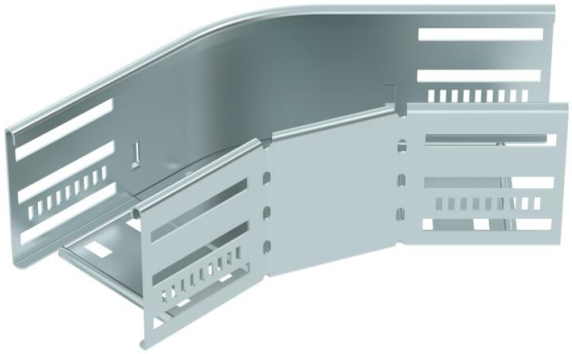

NEW

St	Steel
FS	Strip galvanised

Master data

Item number	6036200
Type	RB 45 810 FS
Description 1	45° bend
Description 2	for cable tray, horizontal
Manufacturer	OBO
Dimension	85x100
Colour	zinc
Material	Steel
Surface	Strip galvanised
Surface standard	DIN EN 10346
Smallest sales unit	1
Unit of quantity	Piece
Weight	60.3 kg
Weight unit	kg/100 pc.
CO2 Footprint (GWP) Cradle-to-Gate	2,0769 kg CO2e / 1 Piece

Technical data sheet

45° bend 85 FS

Item number: 6036200

Dimensions

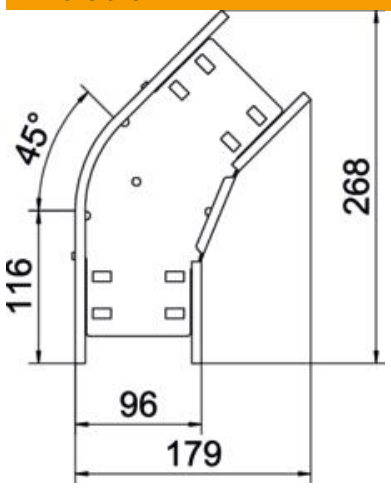

Width	100 mm
Height	85 mm
Plate thickness	0.8 mm
Dimension B	100 mm

Technical data

Bend (angle)	45°
Connector version	Integrated connector
Type	Bend, rigid
Maintain electrical functions	no
Material thickness, floor plate	0.8 mm
With cover	no
Mounting perforation in base	yes
NATO hole pattern	no
Change of direction	Horizontal
ROHS-conformant	yes
Rustproof steel, pickled	no
Side perforation	yes
Permitted temperature range, max.	120 °C
Permitted temperature range, min.	-20 °C
Wide-span version	no
Type of connector, cable support system	screwed/clamped
Recommended quantity of bolts	14 St.
Rail thickness	1.25 mm