Technical data sheet

Bend, angle-adjustable, 60 A4

Item number: 6037170

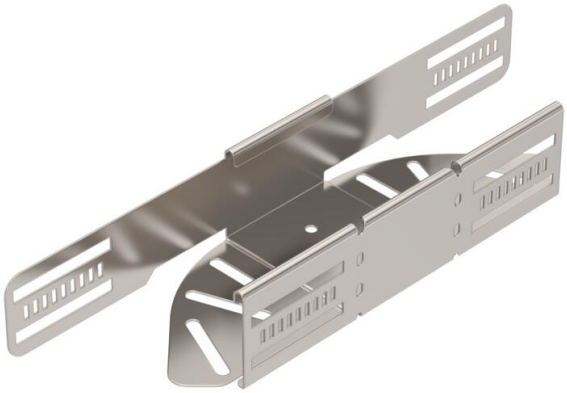

Angle-adjustable bend for the creation of a horizontal branch, fitting for lock and screw-on cable trays of side height 60 mm. Adjustable angle 0–90°. Screwless mounting with double clamps or screw connection with FRS truss-head screws and M6 combination nuts. Can be used indoors and outdoors. Fastening material must be ordered separately.

NEW

A4 Stainless steel

2B Bright, treated

Master data

Item number	6037170
Type	RB W 610 A4
Description 1	Adjustable bend
Description 2	horizontal
Manufacturer	OBO
Dimension	60x100
Colour	stainless steel
Material	Stainless steel 1.4571
Surface	Bright, treated
Surface standard	
Smallest sales unit	1
Unit of quantity	Piece
Weight	41.4 kg
Weight unit	kg/100 pc.
CO2 Footprint (GWP) Cradle-to-Gate	4,1794 kg CO2e / 1 Piece

Technical data sheet

Bend, angle-adjustable, 60 A4

Item number: 6037170

Dimensions

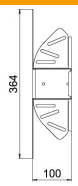

Width	100 mm
Height	60 mm
Plate thickness	1 mm
Dimension B	100 mm
Dimension L	364 mm

Technical data

Bend (angle)	Adjustable
Connector version	Integrated connector
Type	Adjustable bend_complete
Maintain electrical functions	no
Material thickness, floor plate	1 mm
With cover	no
Mounting perforation in base	yes
NATO hole pattern	no
Change of direction	Horizontal
ROHS-conformant	yes
Rustproof steel, pickled	no
Side perforation	yes
Permitted temperature range, max.	120 °C
Permitted temperature range, min.	-20 °C
Wide-span version	no
Type of connector, cable support system	Screwed
Recommended quantity of bolts	10 St.
Rail thickness	1.25 mm