Technical data sheet

T piece 60/100 A2

Item number: 6038160

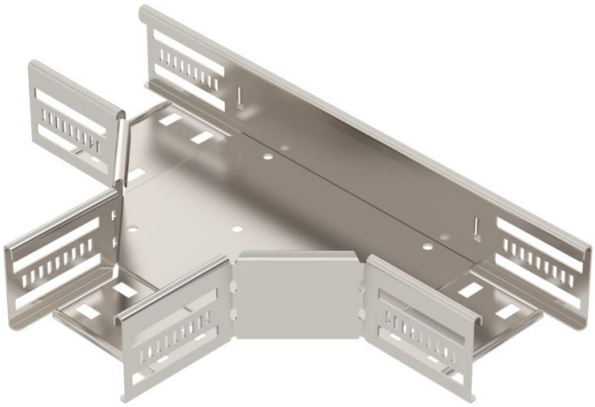

T piece for the creation of a horizontal branch, fitting for lock and screw-on cable trays of side height 60 mm. Screwless mounting with double clamps or screw connection with FRS truss-head screws and M6 combination nuts. Can be used indoors and outdoors. Fastening material must be ordered separately.

NEW

A2	Stainless steel
2B	Bright, treated

Master data

Item number	6038160
Type	RT 610 A2
Description 1	T piece
Description 2	for cable tray, horizontal
Manufacturer	OBO
Dimension	60x100
Colour	stainless steel
Material	Stainless steel 1.4301
Surface	Bright, treated
Surface standard	
Smallest sales unit	1
Unit of quantity	Piece
Weight	76.6 kg
Weight unit	kg/100 pc.
CO2 Footprint (GWP) Cradle-to-Gate	6,4343 kg CO2e / 1 Piece

Technical data sheet

T piece 60/100 A2

Item number: 6038160

Dimensions

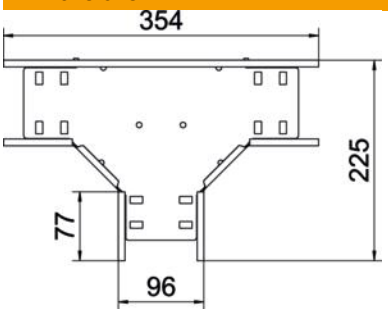

Width	100 mm
Height	60 mm
Plate thickness	0.8 mm
Dimension B	100 mm

Technical data

Connector version	Integrated connector
Maintain electrical functions	yes
NATO hole pattern	no
ROHS-conformant	yes
Rustproof steel, pickled	no
Permitted temperature range, max.	120 °C
Permitted temperature range, min.	-20 °C
Wide-span version	no
Type of connector, cable support system	screwed/clamped
Recommended quantity of bolts	15 St.
Rail thickness	1.25 mm