Technical data sheet

TP support/wall and support bracket A2

Item number: 6364871

TP support / bracket for the fastening to horizontal concrete ceilings and walls.
If the profile is fastened directly to the ceiling or the profile is screwed together as head reinforcement, then, for reasons of stability, always use the spacer, type DS 4.

A2	Stainless steel
2B	Bright, treated

Master data

Item number	6364871
Type	TPSA 145 A2
Description 1	TP wall and support bracket
Description 2	use as support and bracket
Manufacturer	OBO
Dimension	B145mm
Colour	stainless steel
Material	Stainless steel 1.4301
Surface	Bright, treated
Surface standard	
Smallest sales unit	1
Unit of quantity	Piece
Weight	32 kg
Weight unit	kg/100 pc.
CO2 Footprint (GWP) Cradle-to-Gate	1,6117 kg CO2e / 1 Piece

Technical data sheet

TP support/wall and support bracket A2

Item number: 6364871

Dimensions

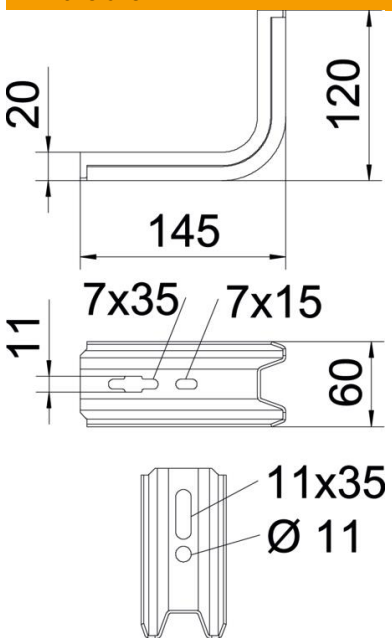

Length	145 mm
Width	60 mm
Height	120 mm
Dimension B	60 mm
Dimension H	120 mm
Dimension L	145 mm

Technical data

Version for	Wall and support bracket
F in kN	1.5 kN
Maintain electrical functions	no
for width max.	100 mm
for width min.	100
ROHS-conformant	yes
Rustproof steel, pickled	no

Loads

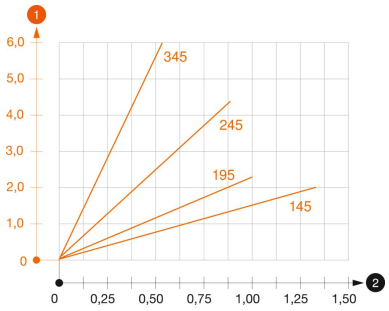

Load diagram, bracket, type TPSA

1 Bending of the bracket tip at permitted bracket load

2 Permitted bracket load in kN without man load

— Load curve with bracket lengths in mm

Characteristic anchor load values for TP bracket

Wall fastening				
	Max. load [kN]			
	Bracket width [mm]			
Anchor type	145	195	245	345
BZ-U 8-30/95	1	1.3	0.7	2.4
BZ-U 10-30/110	1.5	1	0.9	0.55

Max. total load F = cable weight + cable tray + bracket. The load capacity values increase considerably when used in uncracked concrete. The values given are based on concrete of strength class C20/25. Observe the installation conditions of the DIBt approval (anchors).