Technical data sheet

Junction box T100, 2 Modul 45 sockets in cover, 1-pin

Item number: 2007821

Junction box for the connection of cables indoors and in protected outdoor areas. Rectangular design with knock-out entries to the sides and knock-out entries in the bottom. Suitable for wall and ceiling mounting and on mounting panels. With the option of fastening inside and to mount via the corner domes. Cover with quick lock, sealable with retainer and 2 Modul 45 sockets. Made from halogen-free and UV-resistant materials.

Junction box according to DIN EN 60670. Flame-resistant to DIN EN 60695/2/11, test temperature 650 °C.
Clear internal dimensions: 136x102x57 mm

HALOGEN FREE | 750° | CE | UKCA | IP 20 | 500 V

PP Polypropylene

Master data

Item number	2007821
Type	T 100 2MSD WS
Description 1	Junction box
Description 2	with 2 sockets 33° white
Manufacturer	OBO
Dimension	150x116x67
Colour	Light grey; RAL 7035
Material	Polypropylene
Smallest sales unit	1
Unit of quantity	Piece
Weight	25.85 kg
Weight unit	kg/100 pc.
CO2 Footprint (GWP) Cradle-to-Gate	1,1464 kg CO2e / 1 Piece

Technical data sheet

Junction box T100, 2 Modul 45 sockets in cover, 1-pin

Item number: 2007821

Dimensions

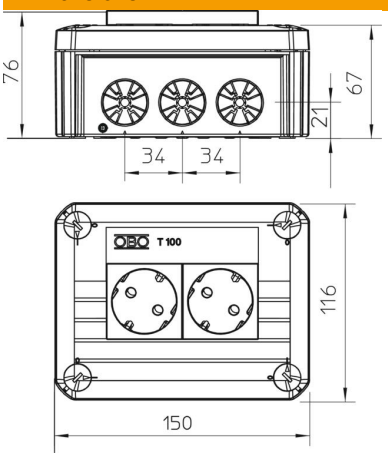

Length	150 mm
Width	116 mm
Height	67 mm

Technical data

[redacted]

Expandable	yes
No. of entries	10
Type of entry	Strain relief entries for direct penetration
Type of entry	Cable
Type of housing penetration	Pre-marking
Measured insulation voltage Vi	500 V
Equipment	Miscellaneous
Cover	Not transparent
Cover fastening	Screwed
Entry from rear	yes
Entries	10
Explosion-tested version	no
Flame-resistant	Acc. to VDE 0471/DIN 695 Part 2-1, test temperature 750°C
Shape	Rectangular
Maintain electrical functions	Without
For Ex zone	Without
For Ex zone gas	Without
For Ex zone dust	Without
Halogen-free	yes
Clear internal dimensions	136x102x57 mm
With screening	no
with lid	yes
Nominal cross-section, min.	2.5 mm²
Nominal voltage	500 V
Sealable	yes
ROHS-conformant	yes
Protection rating	IP30
Permitted temperature range, max.	65 °C
Permitted temperature range, min.	-25 °C
Transparent lid	no
Weatherproof	no

Technical data sheet

Junction box T100, 2 Modul 45 sockets in cover, 1-pin

Item number: 2007821

Technical data

[redacted]

Junction box cover version	Cover with socket